Premier Inflate

# Premier Inflate

## *OPERATORS INSTRUCTIONS*

***CONSTANT AIRFLOW INFLATABLES***

**www.Premier-Inflate.com**

**01952 929393**

# Contents Page


| | |
|---|---|
| **Introduction** | **3-4** |
| **Finding your Safety Certificate** | **5** |
| **What Equipment is Needed** | **6** |
| **Duties of Controllers and Operators** | **7-9** |
| **Hirers Tips** | **10-11** |
| **Health and Safety** | **12-16** |
| **Inflatable Knowledge** | **17-18** |
| **Risk Assessment Information** | **19** |
| **Bouncy Castle Instructions** | **20-27** |
| **Never/Must** | **28-29** |
| **Daily Use Checklist Information** | **30** |
| **Daily Use Checklist / Maintenance Log** | **31** |
| **Inflatable Operation** | **32-33** |
| **Incident Report Sheet** | **34** |
| **How to clean your Inflatable** | **35-36** |
| **Minor Repairs** | **37-38** |
| **Trouble Shooting** | **39-40** |
| **Gladiator Duel Instructions** | **41-42** |
| **Bungee Run Instructions** | **43-45** |
| **Mega Slide Instructions** | **46-47** |
| **Obstacle Course Instructions** | **48-49** |
| **Climbing Wall Instructions** | **50-51** |

# Introduction

Thanks for choosing to purchase a Premier Inflate product we pride ourselves on manufacturing top quality inflatables at affordable prices whilst maintaining a high level of customer service in the hopes that all our customers, whether purchasing from us one time or are a returning customer, are happy with the products and service that's been received from us. On top of this we appreciate every order we receive and work closely with all customers to ensure we understand your needs and requirements

We strive to have happy customers always and we commit to making top quality eye catching bouncy castles and inflatables using only commercial materials and machinery to ensure you have a commercial grade product that's going to generate an income for you.

The purpose of this Guide/Operating Manual is to go through loads of useful hints and tips to get your business started – or even if you are already an existing business there may be something to be learned from this and to also provide all the relevant safety information/risk assessments etc that you will need to be aware of whilst operating your hire business.

As well as providing you with 365 Days Support when purchasing an inflatable from us we also offer a number of free items with every purchase such as: -

- Hire Template Agreements
- 3 Year Extended Warranty
- Safety Certificate
- Pegs
- Storage Bag

Feel free to follow us on social media (see details below) to be kept up to date with new products and special offers/sale items.

Facebook:- Premier Inflate

Instagram:- PremierInflate2023

YouTube:- @premierinflate7593

# Premier Products at Affordable Price!

# Finding Your Safety Certificate

All of our bouncy castles and inflatables come safety tested to show that they conform to the BSEN 14960 Regulations and this test is valid for 12 months and then they need to be retested every 12 months thereafter by a competitant person.

When the inflatable arrives to you your paper certificate is stored under the label on the outside of the wrapped inflatable. You can peel this label back and you will then safely find your certificate. Your safety certificates document all the relevant checks undertaken as well as the serial number which will correspond with the safety label on your inflatable and the date the test was undertaken.

If you have paid the additional charge for a PIPA test then you will have a blue tag on the bouncy castle or inflatable which will show a tag number. Proceed to the PIPA website to enter the tag number and download your PIPA Certificate.

With any test it will only last for 12 months and your inflatable will need to retested every 12 months thereafter.

# What Equiptment is Needed?

## Items Included

Every Bouncy Castle and Inflatable comes with 6 pegs, Storage Bag and a Safety Certificate

Pegs

Bag

Safety Certificate

## Whats Needed to Operate

If you haven't got them to hand already you will need these items to operate your inflatable and for safety requirements

Fan

Mats

Ext Lead

Manometer

Sack Truck

Sandbags

Anemometer

## Optional Accessories

These Items aren't needed but can be useful for operators

Groundsheet

Bouncy Castle Cleaner

Mallet



www.Premier-Inflate.com | 01952 929393 |info@premier-inflate.co.uk

# Duties of Controllers and Operators

Owners or operators of inflatable devices will need to carry out risk assessments of their activities to determine the control measures to avoid risk or reduce risk to acceptable levels. This is relatively easy to do using manufacturers information and instructions for safe operation as detailed throughout this guide.

All inflatables should be safety tested every 12 months which needs to be carried out by a competent person such as the manufacturer, RPII inspector or PIPA inspector.

Daily checks should be carried out before the first use on any day using the advice given in our business guide/instructions. This should include checking the following: -

- The site remains suitable, with crowd control measures in place if appropriate
- Anchorages are intact, protected where necessary and ropes not worn or chafed
- Anchor system secures the inflatables device to the ground
- There are no significant rips or holes in the fabric or seams
- The correct blower specified for the device is being used and the air pressure is sufficient to give a reliable firm footing
- There are no exposed electrical contacts, there is no wear on electrical contacts and plugs, sockets and switches are not damaged
- If an internal combustion engine is used, that the fuel cap is firmly placed on the fuel tank and any reserve fuel tank is suitable and remains in a safe position
- Bolts and screws of the blower are properly secured and that robust guards are secured over the air inlet and outlet
- The blower connection tube is in good condition and is firmly fixed to the blower
- The blower is positioned correctly, adequately protected or guarded and is not causing a tripping hazard

The public should not use the inflatable device until any defects identified during the daily check are rectified.

The inflatable needs to be properly maintained as per the guidance in this business guide.

It is essential for the safe operation of a device that our manufacturer's instructions regarding the use of anchorage points are followed. The device should be secured to the ground with steel riveted pegs where the ground is suitable, an introductory set of 6 pegs is provided with every order and nothing less in size or thickness than these should be used. Some equally effective method can be used on hard standing e.g. Sandbags – the calculated load per anchor point in this instance is 164kg.

Inflatables should not be used when the wind speeds or gusts exceed the maximum safe windspeed of 24mph. This should be observed and checked regularly throughout the days hire using an Anemometer.

The controller or operator should determine the minimum number of attendants needed to operate the device safely and ensure that at least these number of attendants are on duty when the device is in operation. In deciding how many attendants are required, the controller needs to consider matters such as the number of people using the device, the age of the users and the type of environment in which the inflatable is being used. Attendants should be aged 16 or over and the operator should be aged 18 or over.

If the risk carried out by the controller shows that control measures are required to handle large crowds in the immediate vicinity of the inflatable, then the crowd control barriers should be provided by the controller. Barriers should have the minimum dimensions as shown in figure 1 below. They should be at least 1m high and be capable of withstanding people leaning on them or being pushed against them. Where public does not have access to the sides or the back the inflatable or crowd pressures are not expected, then a lower standard is acceptable. The perimeter fence should be at least 1.8 to 2.5m from the closed sides and 3.5 to 4m from the open side. Or 50% of the highest platform. The gateway should be 1m wide.

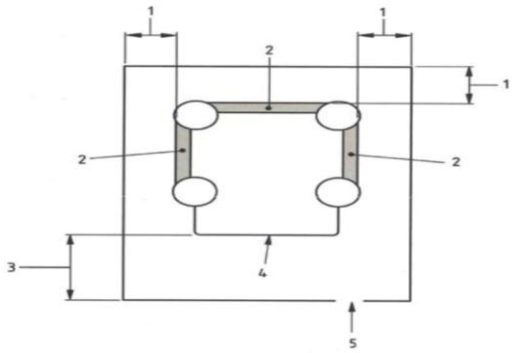


**Key**
1 At least 1.8m
2 Walled Side
3 At least 3.5m
4 Open Side
5 1m Gateway

**Positioning of perimeter fence**

The method of operation drawn up by the controller should ensure that users are admitted to the inflatable in a controlled and safe manner. In particular the operator and attendants should carry out the following instructions

- Ensure that users remove footwear (except socks) and any other hard, sharp or dangerous objects (such as buckles, pens, purses, badges etc) Glasses are best removed
- Do not allow users to consume food or drink or chew gum on the device
- Do not allow users to obstruct the entrance or exit of any inflatable device. Do not allow anyone to play on the step or front apron of the device
- Do not allow users to climb or hang on the walls
- Do not allow users who do not conform to the height restrictions to use the device
- Keep the entrance/exit clear of onlookers so that the operator or attendant has a clear view and can ensure that users can enter/exit safely
- Keep users off the device when it is being inflated or deflated. Deflate when not in use and isolate the blower

The operator and attendants should watch the activity on the inflatable constantly. They should use a whistle or other signal and act at the first sign of any misbehaviour. Somersaults and rough play should not be allowed. Operators should be easily identifiable to users – e.g. company uniform.

It is the operator's responsibility that the equipment is not overloaded with users. Larger, more boisterous users should be separated from the smaller ones. The number of users should be limited to the number stated on the device.

The controller should ensure that all operators receive effective training in then working of the device including

- The method of operating the device
- Safe methods of assembly/dismantling where applicable
- How to carry out a daily check

The controller should ensure that all operators and attendants receive effective training in operation of the device including

- Safe Entry/Exit for users
- Safe anchoring of the inflatable
- Crowd control measures and barriers
- Measures to be taken in the event of a power failure
- Procedures for reporting accidents, defects or breakdowns

All controllers should have in place a company training manual that includes all of the above, specific company regulations and all relevant requirements of health and safety

If any accidents occur – deal with any casualties first but report the event after the incident. Reportable accidents which cause injury, including acts of violence and dangerous occurrences, should be notified to the enforcing authority by the 'responsible person' (who is likely to be the controller or operator).

If at any time a defect is found on the device which could possible lead to danger, the public should not be allowed to use the device until the cause has been identified and remedied. This may include checking all similar components. If there is any doubt about the continued safety the device should not be used until a competent person has confirmed that it is safe to do so. Keep records of all incidents and significant defects in the operations manual and the action taken because they may be useful.

**IMPORTANT**

**We advise all Controllers of inflatables to obtain and study the latest version of BSEN 14960 - Inflatable Play Equiptment - Safety Requirements and Test Methods to make sure their operators are trained sufficiently and competent to operate the equipment safely.**

# Hirers Tips

The below is some helpful tips on hiring out your inflatables – things you may wish to consider when taking a booking and we hope this gets you off to a confident start.

1. **Location** – First you need to consider where your inflatable is going to be set up and whether it's a suitable/practical location for a hire i.e. is it on grass, is there any obstructions in close proximity, is it on a slope and do you have a good right of way to get to the location.
2. **Weather** – If you are doing an outdoor hire your customers need to be aware of the possibility that some weather conditions may result in the hire not being able to proceed this includes strong winds (any wind speeds over 24mph is unsafe to proceed with – this includes gusts!) or consistent/heavy rain. If you discuss this with your customer when taking the booking they could always consider other date options should this be the case or looking at indoor venue options.
3. **Max Amount of Users & User Heights** – when hiring your inflatable always be aware of how many users are suitable on it at one time and make sure your customer is aware of this as overcrowding on an inflatable is incredibly unsafe. You also need to make them aware that users should be no taller than the inside walls and having adults on a children's castle is unsafe too.
4. **Bookings** – Once you start advertising your products for hire bookings are inevitable – make sure you have a clear and accurate diary system in place with clear customer details and its ideal to have a digital and manual diary so you can access it easily at all times. If you decided to get a website you can also get an online booking system too but this isn't free so its whatever suits you best.
5. **Prices** – Prices can vary depending on location, competitors, time of year etc. It is advised that you look at your market research and check what your other competitors are charging to make sure your prices are competitive. You can try and add on hire items that can increase your overall hire price such as garden games, soft play, Didi cars etc. Some customers will still try to haggle on price and it can be tempting to secure the bookings at a lesser rate however you need to keep to your structured pricing guide and reassure them of the quality and level of service they will be getting – however this is at your discretion and sometimes special offers you advertise can really boost hires.
6. **Setting Up** – When hiring out bouncy castles and inflatables we advise that you arrive at the venue with plenty of time to get set up before the agreed deadline before the party starts. Take time to build up customer relationships and offer as much help and support to their function and be on hand to go through their questions. Once you have set up and secured the inflatable using the appropriate equipment take your time to do relevant safety checks (this is explained in further detail later in the guide). Walk around the inflatable with the customer to inspect it and go through the safety points with them so they are comfortable to supervise and ask them to sign the disclaimer. Its also worthwhile asking the customer to deflate the item 10 minutes before your collection (with no users on there) so the air is all out of the inflatable when you arrive ready to roll.
7. **Maintenance** – It is imperative to undertake regular if not daily (depending on usage) maintenance checks on your inflatable looking for things like any stitching issues, any tears and making sure its cleaned down. All these points can be off-putting to customers and may damage your reputation / reviews or cancelled hires. If you do have a small tear you can purchase tear aids through ourselves which offer a temporary solution to stop it from getting any worse and can then be brought back to us for repair when you have a gap in hires. They are clear tear aids so they aren't noticeable to your customers.

8. **Stability** – Remember to check that the inflatable is sufficiently anchored to the ground before leaving the venue. Use heavy duty steel riveted pegs for outdoor grass hires and one should be used for each anchor point on the inflatable and must be hammered into the ground fully. For indoor hires or hardstanding ground sandbags must be used and the regulations state that there should be 169kgs of weight on each anchor point when on hardstanding ground outdoors. For indoor hires we recommend 1-2 sandbags per anchor point as you haven't got any wind to contend with however you need to make sure it isn't going to move around when being bounced on. Premier Inflate will also provide at least the minimum amount of anchor points required for the inflatable if not more as safety is key!
9. **Height of Users** – It is necessary to point out to the hirer that the persons using the products should be no taller than the inside walls even if they are in the recommended age category and under no circumstances should adults be using children's bouncy castles/inflatables its unsafe and will increase the wear and tear on your inflatable.
10. **Supervision** - It is imperative that on every hire there is an appropriate adult to supervise the inflatable at all times to make sure the appropriate behaviour is being maintained, the correct amount of users are on at one time and only persons suitable for the inflatable are using it. On top of this they should be looking out for any potential hazards i.e. stop children from running around the back of the castle causing a potential risk hazard.

The maximum wind-speed in which inflatables shall be used outdoors is 38 km/h (Force 5 on the Beaufort Scale); see Annex B BS EN 14960.

When used outdoors, the inflatable shall be secured to the ground, preferably with ground stakes where the ground is suitable. Each anchorage point on the inflatable and all of the components of the anchorage and/or ballast system, e.g. ropes, webbings, metal attachments, stakes, weights, shall withstand a force of 1 600 N (163 kgs).

**BEAUFORT SCALE**

| Beaufort Number | Name | Knots | MPH | Effects Observed Far From Land | Effects Observed On Land |
|---|---|---|---|---|---|
| 0 | Calm | Under 1 | Under 1 | Sea like mirror. | Calm; smoke rises vertically. |
| 1 | Light Air | 1-3 | 1-3 | Ripples with appearances of scales; no foam crests. | Direction of wind shown by smoke drift, but not by wind vanes. |
| 2 | Light Breeze | 4-6 | 4-7 | Small wavelets; crests of glassy appearance, not breaking. | Wind felt on face; leaves rustle; ordinary vane moved by wind. |
| 3 | Gentle Breeze | 7-10 | 8-12 | Large wavelets; crests begin to break; scattered whitecaps. | Leaves and small twigs in constant motion; wind extends light flag. |
| 4 | Moderate Breeze | 11-16 | 13-18 | Small waves, becoming longer; numerous whitecaps. | Raises dust and loose paper, small branches are moved. |
| 5 | Fresh Breeze | 17-21 | 19-24 | Moderate waves, taking longer form; many whitecaps; some spray. | Small trees in leaf begin to sway; crested wavelets form on inland waters. |
| 6 | Strong Breeze | 22-27 | 25-31 | Larger waves forming; whitecaps everywhere; more spray. | Large branches in motion; whistling heard in telegraph wires; umbrellas used with difficulty. |
| 7 | Near Gale | 28-33 | 32-38 | Sea heaps up; white foam from breaking waves begins to be blown in streaks. | Whole trees in motion; inconvenience felt in walking against the wind. |
| 8 | Gale | 34-40 | 39-46 | Moderately high waves of greater length; edges of crests begin to break into spindrift; foam is blown in well-marked streaks. | Breaks twigs off trees; generally impedes progress. |
| 9 | Strong Gale | 41-47 | 47-54 | High waves; sea begins to roll; dense streaks of foam; spray may reduce visibility. | Slight structural damage occurs (chimney pots and slate removed). |
| 10 | Storm | 48-55 | 55-63 | Very high waves with overhanging crests; sea takes white appearance as foam is blown in very dense streaks; rolling is heavy and visibility reduced. | Seldom experienced inland; trees uprooted; considerable structural damage occurs. |
| 11 | Violent Storm | 56-63 | 64-72 | Exceptionally high waves; sea covered with white foam patches; visibility still more reduced. | Very rarely experienced; accompanied by widespread damage. |
| 12 | Hurricane | 64 and over | 73 and over | Air filled with foam; sea completely white with driving spray; visibility reduced. | |

# Health and Safety

The below points are to be remembered at all times to make sure users are safe when on your inflatable. We advise that the below safety issues to be notified to the hirer before it is left in their supervision: -

- Safe bouncing on the inflatable only no jumping/climbing on the walls or arches
- Users are to remain at the front of the inflatable and shouldn't be running around the back as this could cause a trip hazard
- No horseplay / misuse including backflips and somersaults
- No user must be taller than the inside walls of the bouncy castle/inflatable and no adults are allowed on children's bouncy castles
- Adult supervision is required at all times
- Always make sure the item is securely anchored into the ground either using pegs (if on grass) or sandbags (if on hardstanding ground or indoors) along with suitable heavy-duty rope. Pegs, sandbags and rope should be checked regularly throughout the hire to make sure they are still securely in place and its strength, durability and condition aren't compromised. ALL anchors must be checked regularly throughout the hire to ensure they haven't come free, lose or ineffective during the hire.
- On any open side such as a step etc should have an impact area of at least 1.2m which means there should be safety matting in place on the impact area
- Always keep up to date with your local weather to ensure the conditions are safe for the hire (any winds over 24mph or heavy/consistent rain and the hire should NOT proceed). If conditions change during a hire the users must come off the inflatable and then be deflated and covered with a groundsheet until the weather allows for it to proceed again. Remember to carry out the relevant safety checks again before allowing users back onto the inflatable. Remember you shouldn't rely on weather apps to check the wind speeds you should use an Anemometer.
- Always remember that the funnels are clearly labelled and the deflation funnel should remain tied shut at all times whilst in use as leaving it open can cause loss of pressure/deflation. The fan is to be connected to the inflation funnel and the deflation funnel is only loosened when all the users are off the inflatable and you are deflating/packing away. The same applies if you choose to have a zip instead of a deflation funnel.

# INFLATABLE SLIDES SAFETY INFORMATION

DO NOT ENTER THE INFLATABLE UNLESS IT IS SECURELY ANCHORED

NO SHOES
NO FOOD OR DRINK
NO SPECTACLES
NO PARTY POPPERS
NO PETS
NO SILLY STRING
NO FACEPAINT/JEWELLERY

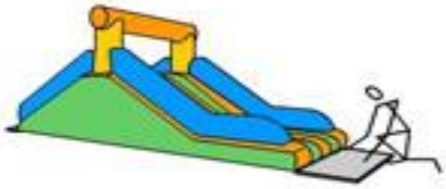

KEEP SAFETY MATS POSITIONED IN FRONT OF INFLATABLE

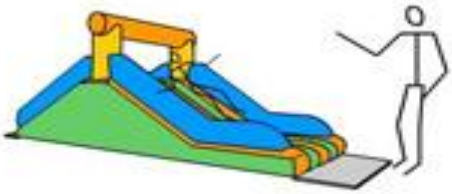

AN ADULT MUST SUPERVISE THE CHILDREN AT ALL TIMES

NO OVERCROWDING TO AVOID ACCIDENTS & DAMAGING THE INFLATABLE

NO ADULTS AS THEY DAMAGE INFLATABLES

DO NOT MOVE OR REPOSITION INFLATABLE

NO SLIDING DOWN THE SAFETY WALL

NO JUMPING FROM THE TOP OF SLIDE TO BOTTOM. ALWAYS SLIDE DOWN

DO NOT INFLATE/DEFLATE WHILE CHILDREN USING SLIDE

SWITCH OFF IN HEAVY RAIN OR WIND

DO NOT SLIDE INTO OTHERS BELOW

NO ROUGH PLAY, BOUNCING OFF WALLS, OR KICKS

NEVER SLIDE DOWN HEAD FIRST. ALWAYS FEET FIRST

DO NOT BOUNCE ON THE TOP OF THE SLIDE

# MEGA-SLIDE SAFETY INFORMATION

Copyright BiHA 2004

NO SHOES, NO FOOD OR DRINK, NO SPECTACLES, NO PARTY POPPERS, NO PETS, NO SILLY STRING, NO FACEPAINT/JEWELLERY,NO TUMBLING OR FLIPPING, MAXIMUM 2 CHILDREN AT A TIME. HEIGHT MAXIMUM 5FEET (150 CM), HEIGHT MINIMUM 3 FEET (90CM), NO CHEWING OR EATING, NO JUMPING ONTO INFLATABLE, NO BOUNCING ONTO OR OFF THE INFLATABLE , NEVER LEAVE CHILDREN UNATTENDED.

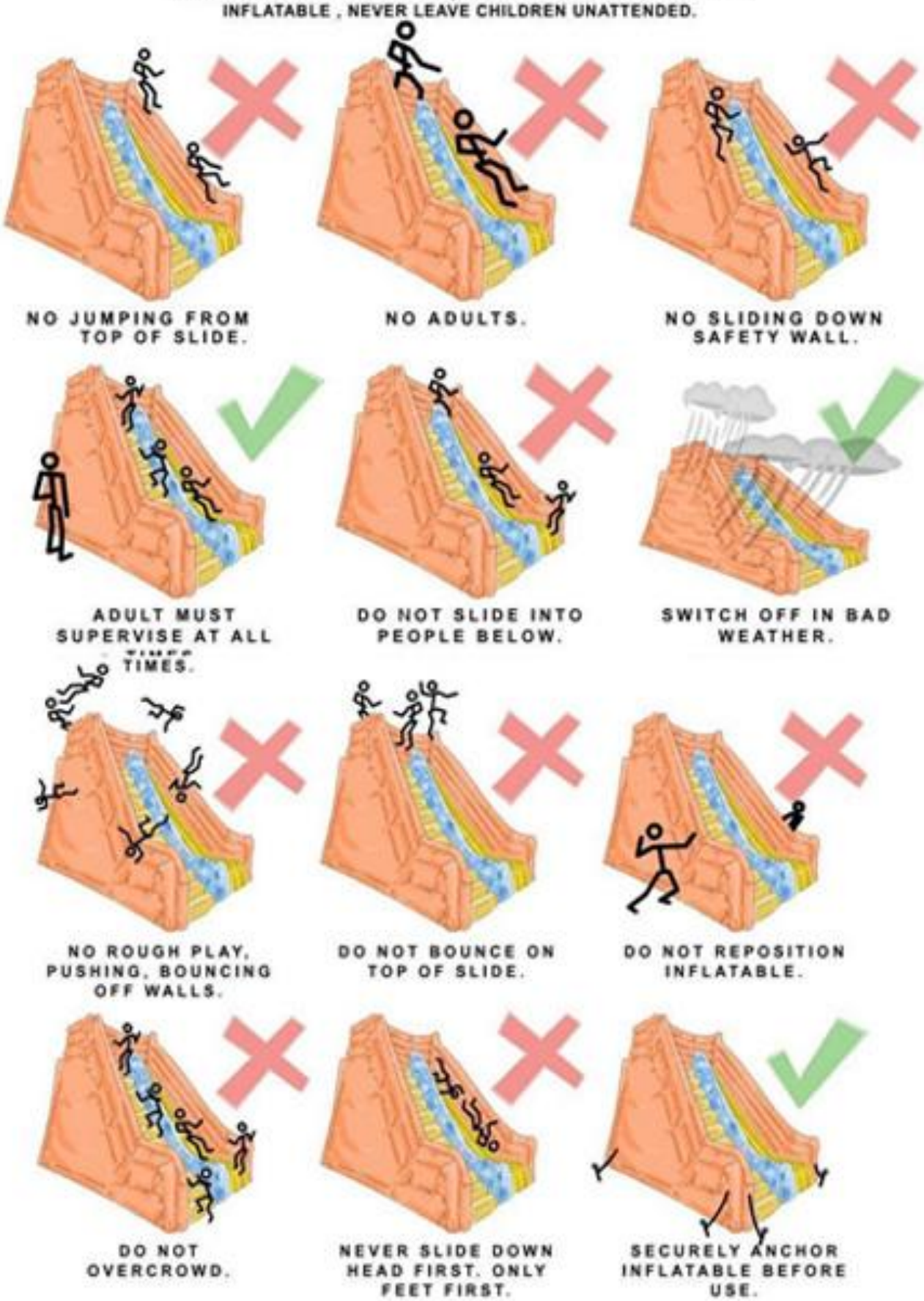


We advise only 2 users at a time . It is strongly advised to have 2 operators supervising this equipment , one at the platform top and one at the bottom. Ensure you have adequate anchorage. Measurements and calculations for this can be found in pren en 14960 on our site right hand side.

# SAFETY RULES

## WE HOPE YOU ENJOY USING THIS INFLATABLE

**For your safety and the safety of others, please adhere to the safety instructions below.**

- NO SHOES
- NO FOOD OR DRINK
- NO SPECTACLES
- NO PARTY POPPERS OR SILLY STRING
- NO FACE PAINT OR JEWELLERY
- NO ANIMALS
- NO PHONE OR TABLETS
- NO SHARP OBJECTS


www.Premier-Inflate.com | 01952 929393 |info@premier-inflate.co.uk

WEATHER CONDITIONS

# STAY SAFE GUIDE

**WE HOPE YOU ENJOY USING THIS INFLATABLE FOR YOUR SAFETY AND THE SAFETY OF OTHERS, PLEASE ADHERE TO THE SAFETY INSTRUCTIONS BELOW.**

We have provided you with a wind speed measurement device (an Anemometer) for the purposes of safeguarding against inflatable use in high winds.

The maximum wind speed in which an inflatable can be used is 38 km/h (Force 5 on the Beaufort Scale) / 24 mph.

You have been provided a simple demonstration that comprehensively covers the use and operation of the Anemometer.

You understand it is your responsibility to be aware of changing wind conditions and record the wind speed in the immediate vicinity of the inflatables location. Should the recorded wind speed approach 38 km/h (Force 5 on the Beaufort Scale) / 24 mph or higher, you MUST quickly and safely evacuate the users and the inflatable device turned off.

Using the instructions demonstrated to operate the Anemometer, wind speed recordings are required to be completed every 30 minutes (or more frequently if there is any indication of wind speed increasing) by a competent persons (aged 18+) supervising the use of the inflatable device.

Following the demonstration, the first recording has been made for you by the operator.

Indication that wind speed is increasing could be (but are not limited to): Wind is raising dust and loose paper, small branches are moved, small trees in leaf begin to sway.

As stated above, if the recorded speed is 38 km/h (Force 5 on the Beaufort Scale) / 24 mph or above, then all users should be evacuated from the inflatable as quickly and safely as possible with the inflatable then being turned off.

The inflatable should not be turned on until wind speeds have been consecutively and consistently recorded at less than 20mph for 30 minutes, taken at 5 minute intervals for the 30 minute duration.

If at any time any recorded wind speed is higher than 17mph then recordings must increase in frequency to every 5 minutes for a period of 30 minutes. This frequency may only return to every 30 minutes when there have been recordings consistently below 18mph for the entire 30 minute period and each recording is below 18mph.

If any time you are unable to take a wind recording for any reason, inflatable use must cease and desist with the inflatable being powered off after all users have been evacuated quickly and safely.

If at any time the Anemometer ceases to function, please contact us immediately for advice.

This sheet is to be used for recording the wind speed at previously stated intervals of frequency. The time of each recording must also be noted.

You understand it is your responsibility to carry out and record these wind recordings at regular intervals, and to carry out the safe and quick evacuation, should the wind conditions approach or reach 38 km/h (Force 5 on the Beaufort Scale) / 24 mph.

| WIND SPEED ON SET UP | MPH | TIME OF WIND SPEED READING |
|---|---|---|
| | | |

| TIME OF WIND SPEED READING | RECORDED WIND SPEED |
|---|---|
| | |
| | |
| | |
| | |
| | |
| | |
| | |
| | |
| | |
| | |
| | |
| | |
| | |
| | |
| | |
| | |
| | |
| | |
| | |
| | |

NOTES

# Inflatable Knowledge

**Number of users on the inflatable** – The below is a guideline / restriction for health and safety purposes as to how many individuals can (at once) use an inflatable safely and effectively. Please remember to make the relevant people aware of these restrictions when your inflatable is being hired out / used. Users must be evenly spread on the inflatable.

10x10ft – Inflatable / Bouncy Castle – Max 4 Children

12x12ft – Inflatable / Bouncy Castle – Max 6 Children

13x12ft – Inflatable / Bouncy Castle – Max 6 Children

16x14ft – Inflatable / Bouncy Castle – Max 6 Children

15x11ft – Inflatable / Bouncy Castle – Max 6 Children

15x15ft – Inflatable / Bouncy Castle – Max 8 Children

20x20ft – Inflatable / Bouncy Castle – Max 10 Children

50x11ft – Inflatable / Bouncy Castle – Max 10 Children

Slides – Inflatable / Bouncy Castle – Max 6 Children

**Weather Conditions** – Please DO NOT use your inflatables in wet weather, high winds, snow or ice, storms and in any other bad weather condition that a competent person would deem to be unsafe. Wind speeds and gusts should NOT exceed 24mph!

**Safety Mats** – For the safety of the users crash mats need to be positioned at open-ended areas of your inflatable. These should be a minimum thickness of 25mm and cover an area of at least 1.2m. See image below for reference.

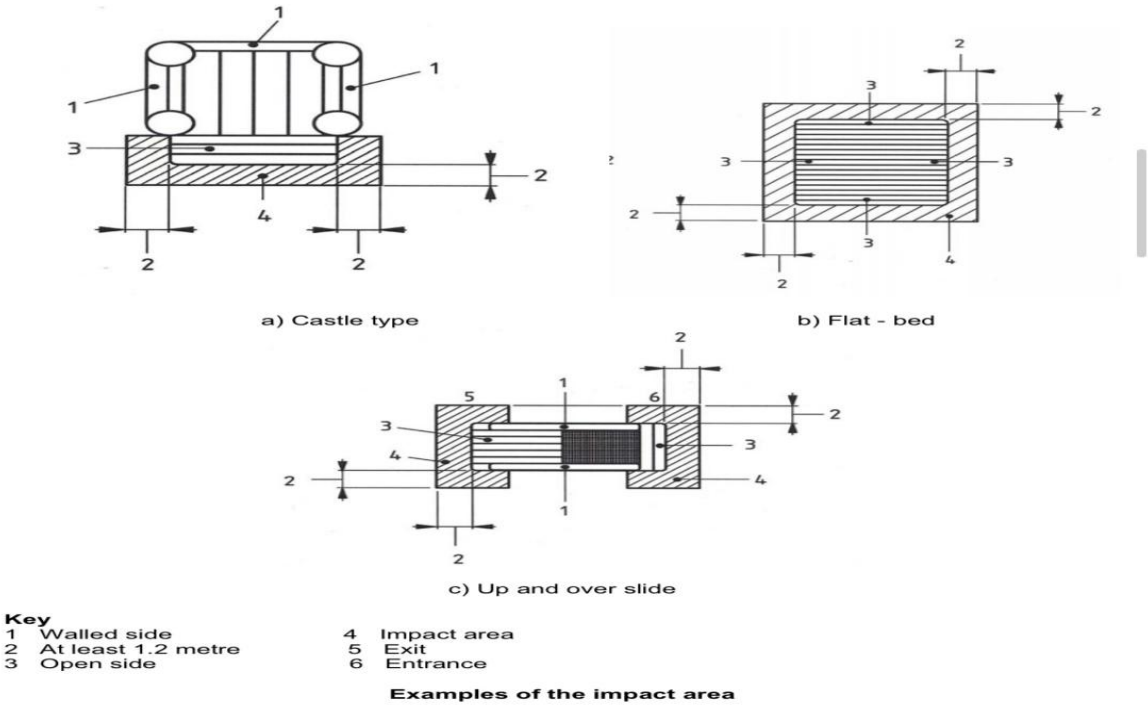

**Daily Checks** – Please refer to our 'Daily Checks' Sheet in this guide. This document outlines the checks that must be carried out on your bouncy castle or inflatable each time its used. A record table is also included in this business guide to assist you with your routine maintenance logging.

**Testing** – Your brand-new Premier Inflate inflatable comes complete with a safety test which is valid for the first 12 months and then they need to be inspected every 12 months thereafter to check they are still fit for use and safe for users. This can either be done with ourselves, through RPII or PIPA. Whichever is more convenient or better suited for you. As PIPA is becoming more and more recognised in the industry please bear in mind that all of our inflatables can be PIPA tested at an additional cost prior to being sent out to you if this is your preference.

## Confused as to what can & can't be tested via the PIPA scheme?

BS EN 14960 is the only standard for design, manufacture and testing of inflatable play equipment. Such equipment tested by competent Inspectors is registered under the PIPA scheme. Following the standard is regarded as best practice and would usually be sufficient to demonstrate compliance with the Health & Safety at Work Act 1974. BS EN 14960 specifies the safety requirements for inflatable play equipment of which the primary activities are bouncing and sliding. The standard excludes water-borne inflatables, domestic inflatable toys, air supported buildings and inflatables used for protection and rescue.

**The PIPA scheme only covers inflatable play equipment within the scope of BS EN 14960 (as described on page 7 of the standard). The diagrams below are an indication of what inflatables can and can't be tested via the PIPA scheme.**

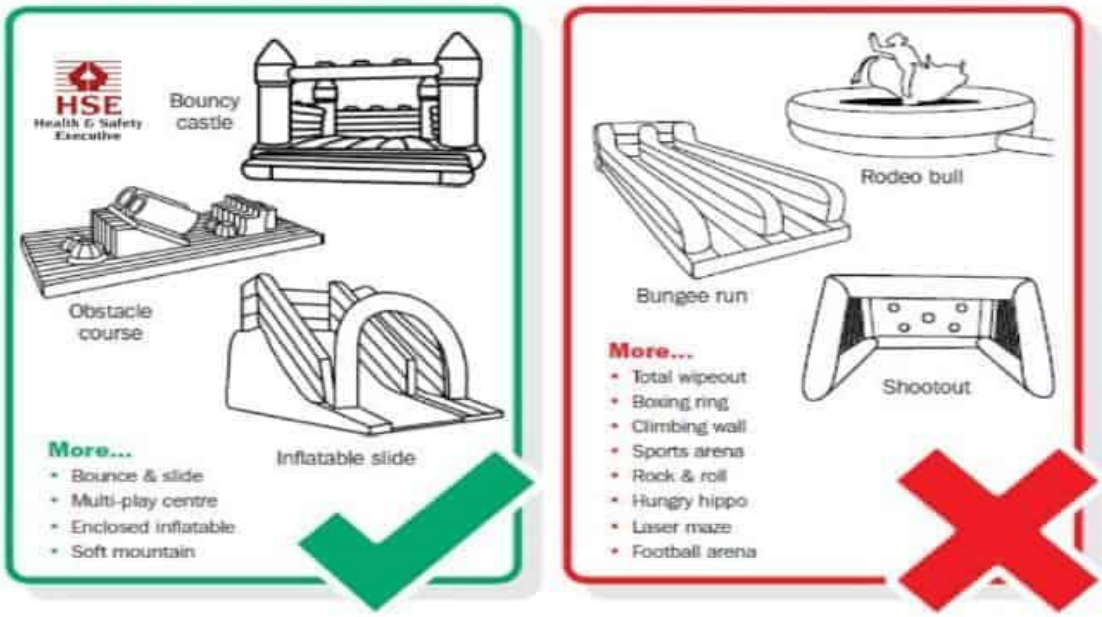


Inflatable play equipment that falls outside the scope of the scheme can still be tested but not using the PIPA scheme. Some Inspectors provider their own in-house inspection which would cover the inflatable elements of the device. To find your nearest Inspector, click here: **www.pipa.org.uk/browse/find-an-inspector.**

**PLEASE NOTE THAT PIPA DO REGULARLY UPDATE THEIR DEVICES TO BE ABLE TO TEST MORE INFLATABLES.**

# Risk Assessments

Operators of Inflatable products must carry out a risk assessment on site for their own products and/or venues. This should be carried out at every event or each time the inflatable is used. These risk assessments should help to locate any potential hazards associated with use of the inflatable and then implementing suitable and sufficient control measures to minimise risk of injury to persons on or in the proximity to the inflatable. Please see the below list of potential hazards to be aware of:

- Secured/Anchored down correctly to ensure the inflatable is stable – make sure to use all the anchor points on the inflatable/
- Situations that may cause loss of pressure to the inflatable; litter blocking the fan intakes / vents, disconnection of the fan and power loss.
- Falls from the structure either by misuse or foul play.
- Individuals tripping (anchor stakes, extension leads etc.)
- Injuries to users due to overcrowding the inflatable product.
- Manual Handling Injuries
- Injuries to users due to inappropriate shoes/clothing/jewellery/
- Suffocation & entrapment whilst deflation process is being undertaken.

An important rule for health and safety measures is that users (both on adult or children's inflatables) are NOT to be taller than the height of the inside walls. The maximum number of individuals allocated to a particular size is included in this guide but should always be reiterated and documented to the hirer. Safety crash mats should be positioned at the open areas of the inflatable product either at entrance and/or exit points. Individuals should NOT make with contact the blower/fan at any time during the hire and it should be kept clear from debris or any potential blockage that can cause pressure failure.

Copy risk assessments can be found on our website for ease of reference.

# Bouncy Castle Instructions

## CONFORMITY AND STANDARDS

For the purposes of this instructional manual, it is assumed that at some time during the previous 12 months the inflatable and its accessories have undergone annual testing by a qualified inspector and passed as complying with the European Standard BS EN 14960:2006 Inflatable play equipment - Safety requirements and test methods – which is a legal requirement.

## SAFE HANDLING

Inflatables can be very heavy and require some care in their handling if injuries are not to be caused. The first requirement for safe handling is that the inflatable was folded and rolled properly after its last use. A good, hard roll, flat at both ends, is so much more easily handled than a floppy heap of PVC. It can be handled and moved on a 2-wheeled sack barrow and easily bowled over onto a truck or trailer. Do not try to lift a complete inflatable. Lift only one end at a time. When the rolled inflatable is lying down, take up a squat position, lean a shoulder into the end and push with the legs. Your leg muscles are the strongest you have and will lift the inflatable onto its end. It can then be easily moved using the sack barrow. When loading the inflatable onto a truck or trailer, stand it up on its end close to the truck or trailer, lean the top onto the edge of the platform and then lift the bottom end and bowl it over.
When loading a petrol blower after an event, be careful not to burn yourself on the exhaust.

## SETTING UP OUTDOORS ON GRASS/EARTH

Choose your site The site must be big enough to accommodate the equipment, bearing in mind the open space needed at front and sides and the length of the blow-tube. The site must be level or have a slope of not more than 5 degrees in any direction. The inflatable must be sited well away from possible hazards such as overhead power lines or other obstacles with hazardous projections (e.g. fences and/or trees). The site must be cleared of debris and sharp objects on, or embedded in, the surface.
If, for crowd-control purposes, a perimeter fence is used, it must be at least 1.8m from walled sides and at least 3.5m from open sides. The gateway must be 1.0m wide. If there are guy-ropes on a high inflatable they must be contained within the fenced area.

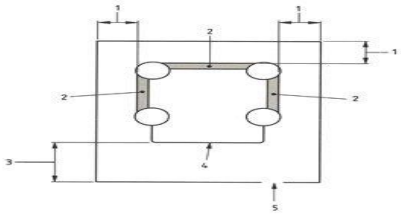

Key
1 At least 1.8m
2 Walled Side
3 At least 3.5m
4 Open Side
5 1m Gateway

**Positioning of perimeter fence**

A clear area must be maintained around the inflatable. The extent of this clear area is established by dividing the height of the highest platform by 2. However, the clear area must be at least 1.8m.

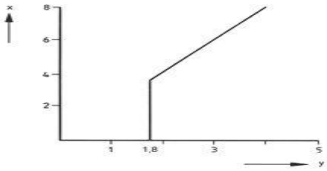


Key
X Height of highest platform (a platform is any surface on which a user can stand)
Y Extent of clear area

## Clear area around an inflatable

An exception to this rule is when an inflatable with inflated walls is sited directly against a solid wall or walls, for example the walls of a building. In such a case, the solid wall(s) must be 2m higher than the highest platform height. Use of this exception must not result in the creation of additional hazards.

## Check the wind

The wind-speed must be no more than Force 5 on the Beaufort scale(maximum 24 mph/38 km/h) which is when small trees in leaf begin to sway. On the morning of the event or the night before, listen carefully to the weather forecast so that you have a good idea of what wind to expect. On the day and during the event, you can check the wind-speed using an anemometer

## Position and roll out the inflatable

Make sure that it faces the right way and all 'siting rules' have been observed.

## Anchor it down temporarily

If ropes form part of the anchorage system, attach them to the anchor-points. The windward side of the inflatable needs to be anchored temporarily while it is inflating so drive anchor-stakes into the ground on the windward side and loosely tie on the windward side ropes. Using industry standard 38cm long x minimum 16mm diameter stakes, there is little risk of penetrating underground services. However, you should check that there are no obvious signs of excavation for cable runs, pipes etc. and check with the client for the location of any underground services before driving the stakes in.

## Inflate

Make sure onlookers keep away. Ensure all electrical equipment is suitable for outdoor use. Check that you have the correct size and type of blower and attach it securely to the blow-tube. Tie up any other tubes and close any zips. Switch on the blower and allow the inflatable to inflate fully. Watch the temporary anchorages you have connected in case they are positioned wrongly and pull tight. If they do pull tight, switch off the blower quickly and re-position either the inflatable or the stake, or loosen the rope. When the inflatable is fully inflated, you can push or pull it into its correct position.

## Anchor it down permanently

You must use every anchorage point on the inflatable because their number and positioning has been calculated for each inflatable. Drive an anchor-stake into the ground for each remaining anchorage point and securely connect the ropes or webbings. The original temporary anchorages might want moving so as to be in the correct position. The stakes need to be positioned so that the ropes or webbings go upwards from the stake towards the inflatable at between 30 and 45 degrees. Moving the stake closer makes the angle bigger. Moving it away makes the angle smaller. The stakes should be driven into the ground slightly inclined away from the inflatable and the ropes or webbings should not be pulled too tight. They should curve gently up to the inflatable so as to allow movement of the inflatable up and down when in use. The stakes should protrude no more than 25mm above the ground. If the inflatable requires anchorages in the impact area, make sure the stakes are as close in to the base of the inflatable as possible.

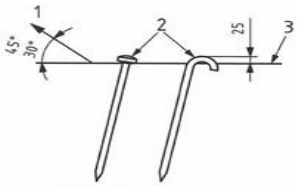


**Key:** 1 Direction of force, 2 Inclined away 3 Ground level

**Driving in anchor stakes**

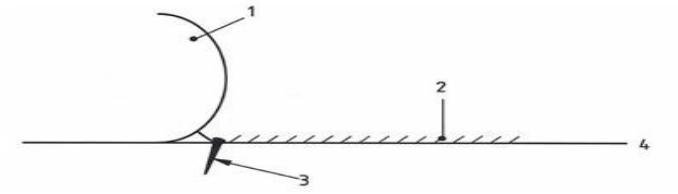


**Key**

1 Side of Inflatable
2 Impact Area
3 Anchorage stake as close as practicable to the side of the inflatable
4 Ground level

**Anchorage in an impact area**

## Adjust the position of the blower

The blower needs to be moved as far away from the inflatable as the blow-tube will allow and then moved forward 50mm so as to leave a little free play between blower and inflatable so that the blower is not pulled when people are bouncing. Note: The blower must stand at least 1.2m away from the inflatable.

## Check the working pressure

All inflatables need sufficient internal air pressure to make them stand up and assume their correct shape and to support the weight of the users. You can check the pressure is sufficient inside the inflatable by standing on the lowest part of the inflated base (usually the step) with your feet together and making sure that your feet do not touch the ground through the inflatable. You must stand at least 50cm from the edge. If you are heavier than the intended user and your feet do not touch the ground, then the pressure will be sufficient. If you are lighter than the intended user, get a heavier person's help. If you are using a petrol-engined blower, regulate the speed of the engine so that the pressure inside the inflatable is not too great. An electric blower does not need regulating.

## Make sure your blower is safe

If you are using an electric blower, route the cable(s) out of the way of users and onlookers. Use an RCD circuit breaker somewhere in the line. If you are using a petrol engined blower, make sure no-one can burn themselves on the exhaust pipe and that the petrol cap is on. Keep your spare petrol out of sight and stored in a bund container. When you need to re-fill with petrol, stop the session and get everyone away. Switch off the blower and let it cool for a few minutes. Then use a funnel to re-fill the petrol tank so that no petrol is spilled. Return your spare petrol to its hiding place. Re-start the blower and, when the inflatable is fully inflated, start the session again.

## Do you need mats at the entrance?

If the grass or earth is soft and not abrasive, it may not be necessary to use landing mats all around the entrance/exit, because soft grass and earth have sufficient impact attenuating properties for the maximum allowed fall-off height of inflatables (60cm). However, if the grass or earth are hard and abrasive, you will need to install landing mats over the whole of the impact area.

## SETTING UP OUTDOORS ON HARD STANDING

### Anchoring

On hard standing, you will be unable to anchor with stakes driven into the ground. Each anchor point must be attached to something which will withstand a force of 164kg. This could be weights or sandbags, vehicles, provided they are immobilised and under your control, or fittings already in the ground. If you are near the edge of hard standing, you can sometimes anchor the rear and one side of the inflatable with stakes into the ground beyond the hard standing, leaving only one side to be anchored in the ways suggested above.

### Use landing mats

On hard standing you will definitely need landing mats, covering the whole of the impact area, and you will need to be on your guard against them moving when the session is in progress.

### Protect the base

If the hard standing is abrasive, you must use a groundsheet under the inflatable so as not to wear out the base of the inflatable.

### Keep the blower still and in position

A blower, running on hard standing, tends to move around because of the vibrations. Stand the blower on a rubber mat to avoid this.

## SETTING UP INDOORS

### Is the site suitable?

You must check that there is enough floor-space on which the inflatable can stand with its blow tube fully extended and that there is plenty of space (3.5m) where the users get on and off. The height of the ceiling must be sufficient to allow the inflatable to inflate fully without touching and high enough to prevent users from touching the ceiling or any other fittings such as lights. If there is some doubt about the height, stand by the blower when inflating so that you are ready to switch off quickly if any part of the inflatable is too tall.

### Does the inflatable need anchoring?

Much depends upon the size and weight of the inflatable and the size of user. The inflatable will not blow away when indoors, but it could move across the floor and it could overturn. An inflatable with a small base and high side-walls is particularly prone to overturn if there are tall users and they make a concerted effort to run from side to side throwing themselves against the walls. This type of action on any small inflatable will at least cause the inflatable to move sideways thus putting the blower out of position and threatening to pull the blow-tube off of the blower. This tendency can be combated by the use of weights tied to the anchor-points, or by attaching the anchor-points to gym bars or any other secure fittings. Sideways movement can be counteracted by placing rubber mats under the inflatable. Likewise, a rubber mat must be placed under the blower to keep it still.

## Protecting the base

If the floor is not abrasive, there will be no need to use a groundsheet under the inflatable.

## Landing mats

You will definitely need to use landing mats to cover the whole of the impact area and be wary of them moving while the equipment is in use.

## Where is the impact area?

The impact area has been mentioned several times previously. It is the area of ground immediately next to any open side of the inflatable and it extends to 1.2m away. For instance, on an ordinary castle with 3 walled sides and one open side with a full width step, it is the area, shaped like a U, all around the step. Here are a few common examples:

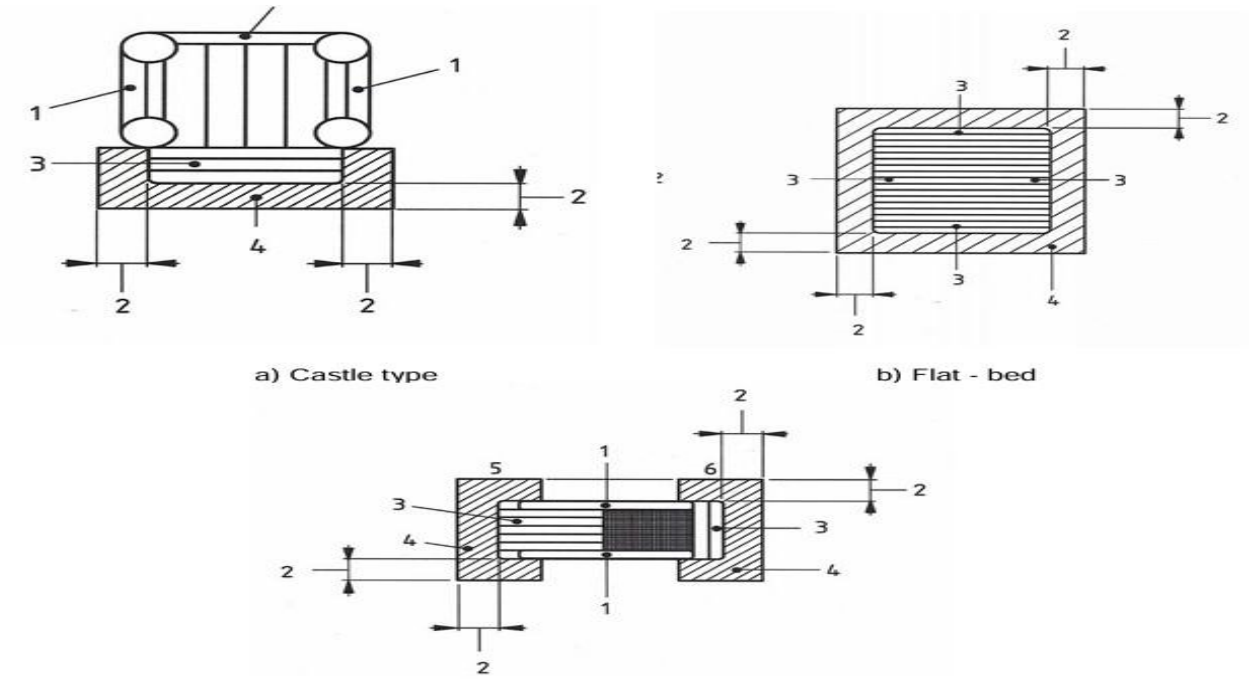


**Key**

1 Walled side
2 At least 1.2 metre
3 Open side
4 Impact area
5 Exit
6 Entrance

**Examples of the impact area**

## INFLATE

It is important to inflate your product in the easiest and safest manor possible. This in the long run will save you time as well as being conscious of users safety whilst the inflatable is in use. Below are the steps on how to do this, please follow this guide for all your hires/events to ensure safety measures are met: -

1. Locate the most level part of the garden or area on which the inflatable will be erected. The best possible are for bouncy castles/inflatables to be positioned is on a level surface with soft grass. It is recommended to always use a groundsheet to save you time and money on the cleaning and maintenance. Always ensure there are no overhanging tree or obstacles near the inflatable space as this may result in safety measures not being met. At this point you would get your risk assessment and note that this has been checked/considered.

**Your set up site must be level or have a slope of no more than 5 degrees in any direction.**

2. Always take a closer look/inspection of the desired plot; you must check for stones, rocks, tree roots etc as these items may compromise the inflatable users safety (e.g. stability, tripping hazard etc). By looking for these unwanted items you are also assessing the grounds stability for your inflatable.

3. Once the above points have been checked by a competent adult and you are happy to continue you should now position your inflatable and begin to unroll. Continue to unroll and unfold the item until it is fully flat.
4. Once the inflatable is unrolled and in the best position for the hire you can secure it to the ground using the steel riveted pegs if in grass or sandbags if on hard ground – bearing in mind that if using sandbags you must have at least 164kgs of weight to each anchor point to ensure its safe for hire. To make sure the pegs are secure it is advised to use a heavy-duty mallet to get the pegs through the D Ring on each anchor point and is full in the grass.

5. At this point, providing your inflatable was purchased from Premier Inflate, at the rear of the inflatable there will be two funnels – one long funnel and one short funnel and they will be labelled as Inflation and Deflation funnel. Attach the blower to the inflation funnel and secure the buckle strap around it so its tight. The deflation funnel is then to be tightened using the buckle strap.

**Please note that the deflation funnel is only for deflation a fan should not be attached to this at any time!**

6. When the above has been completed plug in your blower and allow the item to inflate.
7. Once the item is inflated have a walk around and make sure all the anchor points/pegs are secured, the blower funnels are straight and there is no debris or obstructions etc.
8. As of June 2022 you now need to keep a record of the pressure of the inflatable so you will need a digital manometer. Once the inflatable is inflated you insert the clear tube of the manometer into the inflatable funnel and make sure its secure and take a record of your reading. All readings must be over 1kpa as a pass – if you are getting readings under this replace your fan and try again in case it is the fan causing the issue.
9. You will also need to use an Anemometer to record the wind speeds and gusts to make sure they don't exceed 24mph – you shouldn't just be relying on weather apps and if you are concerned that the wind speeds are due to get worse throughout the day you can leave the Anemometer with the customer so they can periodically check its still safe. Make sure you note your risk assessment with the anemometer reading

10. Make sure your safety mats are placed around the entrance/exit points

**PLEASE NOTE THAT IF YOU ARE OPERATING A SNOW GLOBE INFLATABLE OR A MOONWALK THIS WILL REQUIRE A 1.5HP FAN TOGETHER WITH A HIGH VELOCITY FAN TO OPERATE IT AFFECTIVELY – THIS CAN BE PURCHASED THROUGH PREMIER INFLATE**

## DEFLATE

1. Ensure all users are safely off the inflatable and check there isn't any objects or debris left inside
2. Once you are happy that the above has been checked sufficiently you can unplug the blower and release the inflatable and deflation funnels to allow the air to come out – making sure they are laid out straight and flat.

3. If you have a zip it would be at this point you would open it up to again allow the air to come out.
4. Allow the unit to fully deflate – to speed this process up you can walk over the inflatable without shoes on to direct the air towards the funnels/zip.
5. Whilst the unit is deflating it's a good time to remove the pegs from the ground and load your vehicle with all accessories such as pegs, mats, fan etc.
6. Once the unit is fully deflated its now ready to roll. Make sure the unit is laid out flat go to one side find the edge of the wall and neatly pull it to the middle of the inflatable. Repeat this process on the other side so both walls should now meet in the middle of the inflatable.
7. Leaving the funnels laid out flat at the back fold the side (lengths) of the inflatable to the middle point – do this for both sides so they meet in the middle
8. Fold the inflatable in half again now creating a long, thin manageable sized unit

9. Slowly begin to roll the inflatable starting from the step of the bouncy castle (the opposite end to the funnels) – remember to roll the castle as slow and tight as possible. As you roll the inflatable product the air will be squeezed out through the funnel located at the rear of the unit.

10. Once you have almost rolled the inflatable tuck the funnels inside the inflatable before the final roll. Now secure your roll with rope or buckle straps. Never leave the funnel on the outside of the roll as this may get caught on a nearby wall and tear.

11. Now you can load all remaining items which should just be the inflatable into your vehicle and you are completed.

**Please bear in mind that we do provide a training DVD and videos on YouTube to visually show the above so please feel free to watch this to get a better understanding of the process. If this is your first time ordering an inflatable it's great to do a few practices before your first hire so you know that you are confident with the process.**

# NEVER/MUST

If you are ever in any doubt about any of the safety regulations or procedures please don't hesitate to contact us via phone or email we are always happy to help.

Please contact us on the below:-

info@premierinflate.co.uk

01952 92 93 93 ( +44(0) 1952 92 93 93)

www.Premier-Inflate.com

## YOU MUST ALWAYS:-

- Be health and safety conscious at all times and make sure you are aware of all the safety regulations as detailed in this guide – its better to be safe than sorry even if it results in having to cancel a hire its not worth the risk.
- Ensure there is a responsible adult supervising every hire and at all times when in use
- Always smile, have a friendly and polite manner with your customers and any people you come across as they may become a future customer – even if someone is unhappy with something always deal with it appropriately.
- Use every opportunity to promote your business/products/services – word of mouth is a powerful tool
- Ensure your products are clean and safe. This includes getting them tested every 12 months as customers may ask to see up to date safety certificates.
- Inspect the inflatable with the customer once its inflated and set up to show there is no damage to the inflatable and ask the customer to sign the hire agreement as confirmation of this. Follow this process again when you are collecting the item at the end of the hire to ensure no damage has been incurred during the hire
- Always clean and dry your inflatable after each use – especially if its been raining. Its important to fully dry an inflatable out as if they are left damp for long periods of time they can be prone to mould. This includes
  the inside of the inflatable too – you can purchase heater blowers to speed this process up. Please feel free to contact us if you wish to discuss this
- Remember to leave an extra tarpaulin groundsheet with the customer if there are light showers expected throughout the day so the castle can be let down and covered during the shower.
- Always take a record of the inflatable pressure to ensure its safe for use and check the wind speed limits (this includes gusts).
- Try and expand when you feel it's appropriate to offer a wide range to your customers or items that are great add ons for example soft play and toddler castles.

## YOU SHOULD NEVER

- Cut corners on peoples safety and always take the time to check that everything is safe and secured to the ground and safety measures such as risk assessments and check lists have been carried out.
- Don't let your customer set the inflatable up themselves it is your responsibility to ensure that it is set up correct before leaving the premises. Always reiterated to your customer that the inflatable is not to be tampered with or moved etc in your absence.
- Leave your inflatable at a venue you feel isn't suitable or safe i.e. not enough space, sloped garden, obstructions.
- Amend/adapt/repair the inflatable yourself this should always be done by a regulated manufacturer or repair specialist to ensure you don't compromise the integrity of the inflatable or unintentionally make something not comply with BSEN standards i.e. cutting down the funnel sizes etc
- Don't let anyone misuse the inflatable by climbing/jumping off walls or foul play of any nature. Users should not be allowed on the inflatable if they are taller than the inside walls.
- Hire an inflatable without safety mats at the entrance/exit points and any other areas you see fit. This must cover the impact area of at least 1.2m
- Leave a hire without double checking that you have secured the inflatable sufficiently either with the pegs or sandbags. There is no trip hazards or obstructions
- Allow the inflatable to become overcrowded as this may cause unnecessary and avoidable accidents. See the recommend user amounts list. Amounts are also detailed on the manufacturer's safety label as well as safety certificate.
- Inflate or Deflate whilst users are on the inflatable. All participants must be away from the inflatable whilst its being set up, deflated and during safety checks.
- Move or reposition the inflatable when it's in use
- Allow users to go onto the inflatable with shoes or sharp objects such as glasses or jewellery.
- Use inflatables in poor weather conditions such as high winds, heavy rain or snow. In this circumstance you should see if the customer can arrange an indoor venue or an alternative date.

# MAINTENANCE LOG / DAILY USE CHECKLIST

1. Regularly/Continually check that the site remains safe throughout the hire i.e. no debris or rubbish on or near the inflation fan, no overcrowding on the inflatable, no users taller than the inside walls, wind speeds and no foul play
2. Ensure that the pegs/sandbags remain in position and secured during use
3. Check to make sure no rips or tears are occurring on the inflatable that require attention. Tear aids can be used as temporary solutions to avoid disruptions to hires however they should always be repaired fully at your earliest convenience.
4. Check that all seams on the inflatables are intact and still in good condition.
5. Make sure the correct inflation fan is being used for the inflatable and that the pressure is correct/sufficient. This must be a minimum of 1kpa
6. Ensure to take regular checks for the wind speeds/gusts – this should not exceed 24mph use an Anemometer when setting up and regularly throughout the hire
7. Make sure there are no exposed electrical cables and they are all in good condition
8. If an internal combustion engine is used (petrol blower or generator) ensure the fuel cap is firmly closed on the fuel tank and any reserve fuel is in a safe and suitable location
9. Check the bolts/screws on your fan haven't come loose and are tight.
10. Check that the Inflation funnel is tightly secured around the blower/fan and the deflation funnel is secured tightly with buckle straps
11. Check that the blower/fan is positioned correctly for maximum airflow and there are no obstructions/debris. Nothing should be placed on the blower such as coats/bags
12. If in any doubt over any of the safety concerns at any point during a hire regarding equipment, inflatable or the surrounding area / environment you must make sure all the users are off the inflatable and switch it off which you investigate any matter. The public should not use the inflatable until the problem has been resolved/rectified by a competent/responsible adult.
13. Check all anchorages/rope regularly to ensure they are intact and haven't become worn. The general public are to be kept away during inflation, safety checks and deflation process.

# OPERATOR MAINTENANCE LOG / DAILY USE CHECKLIST

| DATE | CHECKED BY | ACTION REQUIRED | SIGNED AS SAFE |
|---|---|---|---|
| | | | |
| | | | |
| | | | |
| | | | |
| | | | |
| | | | |
| | | | |
| | | | |
| | | | |
| | | | |
| | | | |
| | | | |
| | | | |
| | | | |
| | | | |
| | | | |
| | | | |
| | | | |
| | | | |
| | | | |
| | | | |
| | | | |


www.Premier-Inflate.com | 01952 929393 |info@premier-inflate.co.uk

# INFLATABLE OPERATION

The operator of the inflatable must be at least 18 years of age and a responsible/competent person.

Their duty is to ensure that no individual over the age/height threshold is allowed access to the inflatable at any one time. Also, to ensure that there is no overcrowding, using the recommended maximum guidelines set out in this business guide and as detailed on the inflatable's safety label – dependant on the size of the inflatable. Remembering to not allow anyone taller than the inside walls use the inflatable at any time.

No shoes or sharp objects such as glasses or jewellery are allowed on the inflatable at any time. However, the users should have socks on at all times whilst using the inflatable for cleanliness concerns. No items of food or drink should be on the inflatable at any time.

The operator should be permanently positioned at the open end of the inflatable (i.e. by the step) using a whistle or something similar to gain the participants attention when there is an issue that requires immediate attention (injury or safety issues etc). The operator/supervisor must be aware that participants of the inflatable are to jump up and down only and are not permitted to misuse the inflatable in any way i.e. foul play, climbing on walls/arches etc. Younger users may need more attention if older participants are also using the inflatable. All participants must be made aware by the operator/supervisor to take extra care when entering or exiting the inflatable. It is recommended that you use one side of the step for entrance and the other side for exiting to avoid users colliding with each other whilst entering/exiting. With obstacle courses you should use the step as the entrance only and the slide is the exit point and at no point should the users through the obstacle course in the wrong direction. The operator and the participants must all be aware that there should be no pushing and shoving on the inflatable as injury can be caused. No users should be running around the inflatable and must always stay aware from the fan which should be cordoned off with appropriate measures i.e. cones or restriction tape etc.

The operator/supervisor must ensure that the inflatable stays in tact at all times throughout use. In the event of any failure all the participants must be removed from the inflatable quickly and safely whilst the issue is investigated and rectified. Once the inflatable is fully operational again all participants can then go back on. All accidents are to be noted/recorded in an accident record book/form located in this business guide and any injured parties or their representatives, if the injured party is a child, must sign and date under the explanation of what has occurred.

The weather conditions should be monitored at all times when it is in use outdoors. If the weather conditions are not deemed as safe by the competent/responsible adult the inflatable must be deflated and deemed as out of use, unless it can be relocated to a suitable indoor location. The anchor points are to be thoroughly checked throughout use, ensuring that they are still intact and have not moved during use.

The power is to be checked regularly to ensure it remains in place and to guard against any accidents or loss of pressure. The operator should look to check that no rubbish blows to the fan, any rubbish by the fan should be removed immediately. No member of the public should have access to the blower or electric sockets. In the use of petrol blowers, the fuel must be stored in an appropriate container, safely away from individuals and located in a safe and isolated area. During refuelling the unit should be safely deflated and the public kept away until its ready to be used again.

The seams, zips and windows (if applicable) should be monitored throughout the inflatables use, to look out for any rips or tears which may result in pressure loss, further damage and possible safety issues. Safety measures should be met at all times remembering to mark out a clear walk way, ensuring participants are aware of this, to avoid tip hazards (anchor points, cables, inflation fan etc).

Before the deflation process the operator/supervisor should thoroughly check to see if any individuals remain on the inflatable, if so, they should be safely removed and escorted away from the area to allow for the inflatable to be deflated and packed away safely.

**PLEASE NOTE THAT IF YOU ARE OPERATING A SNOW GLOBE INFLATABLE OR A MOONWALK THIS WILL REQUIRE A 1.5HP FAN TOGETHER WITH A HIGH VELOCITY FAN TO OPERATE IT AFFECTIVELY – THIS CAN BE PURCHASED THROUGH PREMIER INFLATE**

# INCIDENT REPORT SHEET

| DATE | INCIDIENT REPORT / DESCRIPTION | VENUE/ADDRESS | SIGNED | PRINT NAME |
|---|---|---|---|---|
| | | | | |
| | | | | |
| | | | | |
| | | | | |
| | | | | |
| | | | | |
| | | | | |
| | | | | |
| | | | | |
| | | | | |
| | | | | |
| | | | | |
| | | | | |
| | | | | |
| | | | | |
| | | | | |
| | | | | |
| | | | | |
| | | | | |

# HOW TO CLEAN YOUR INFLATABLE

Provided the operating instructions are followed correctly your inflatable should require minimal effort to clean. However, as you can appreciate after extensive use inflatables will inherit soft marks which can be easily remove using the appropriate techniques and cleaning procedures as detailed below. It is important, as previously stated to ensure that participants wear socks at all times when using the inflatable due to cleanliness issues. However, cleaning the inflatable is an important part of sanitising the inflatable, which is a requirement for all customers it also keeps it looking its best – no customer wants a filthy inflatable to arrive for a birthday party etc.

It is to your advantage to keep your inflatable product as clean as possible to save you time in the long run and keep your inflatables looking as appealing as possible to your customers. Groundsheets are advisable to purchase and these sit underneath your inflatable at all times stopping the bottom of the inflatable from getting dirty and also avoiding any stones rubbing against your inflatable with a risk of tearing it.

We recommend always having to hand clothes, towels, wipes and or cleaning solution so you can have a quick wipe down of your inflatable before deflating and packing away – remembering to make sure its dry too.

*Remember to check your inflatable with the hirer when leaving or collecting your inflatable products, referring to your signed hire agreement. Should your inflatable be damaged/dirty in any way, which was not documented prior to the event, you need to discuss a further charge with the hirer for cleaning/repairs, as per the agreement. There is an example of the agreement within this business guide.*

1. When you decide to clean your inflatables pick a day that is dry and sunny
2. Washing up liquid with anti-bacterial properties is ideal in a bucket of warm water using sponges to buff in and dry towels to dry it off
3. Should you need to clean the rood it is recommended that this is cleaned first as the item would need to be deflated and flatted out for this.
4. Wash over the inflatable with a damp sponge, doing it in sections to avoid the water running and leaving marks
5. Change the water at regular intervals, or whenever you feel necessary, to make sure its clean.
6. Next it would be ideal to clean the outside of the inflatable
7. Finally, if necessary hoover off any debris from inside the inflatable.
8. Allow the inflatable to blow for a while whilst it dries before deflating and packing away
9. Storing the inflatable away when it isn't full dry IS NOT recommended if the inflatable has got wet during a hire we recommend inflating it as early as possible (on the next dry day) to dry it out properly

## *Hints and tips for cleaning: -*

- Customers have been raving about the following cleaning products which have made the cleaning process more efficient – magic sponges, elbow grease, HD mould remover, the pink stuff!
- Don't use cleaning products with high bleach content as this can cause fading to the material or artwork
- Don't leave an inflatable wet as this can cause mould which is much more difficult to clean – if the inflatable may not be used for a few months i.e. through the winter months then apply a thin layer of talcum powder over the inflatable so it absorbs any moisture and hopefully protect against mould – this will then need a quick wipe off before the inflatable is next in use.
- Consider a heater attachment for a blower which can be purchased through Premier Inflate and will dry the inside of your inflatable too as this again can cause mould and many people can focus on drying the outside of the inflatable but the inside is just as important.
- Regular/frequent cleans make for lighter work leaving for long periods of time will mean a longer time spent cleaning.
- Always make your customers aware that face painting and inflatables don't mix! If children use the inflatable with face paint this will more than likely stain your inflatable!!

# MINOR REPAIRS

Most commonly repairs are due to misuse of the inflatable or accidental damage and therefore it is necessary to ensure that your inflatable is not being used by anyone over the strict height limit of the inflatable – specifically no one taller than the inside walls or adults on children's bouncy castles etc as this all adds to the wear and tear of the inflatable causing unnecessary or more frequent damage/repairs. Its is imperative to ensure that your customer signs the hire agreement, once the inflatable has been set up and inspected by yourself and the hirer and this is to be repeated upon collection of the item. Therefore, in the event of any damage caused during the hire you can claim back the repair costs incurred from the customer.

However, if you have a minor repair i.e. a small tear there are some temporary solutions that can ensure you avoid cancelling any hires.

1. Using Glue – Premier Inflate can provide you with a repair kit which consists of PVC glue and PVC patches: -
    - Deflate the unit
    - Clean and dry the area making sure it's free from dust, grease and any other substances
    - Make sure the repair area is kept flat
    - Cut out a patch which should always be larger than the damaged area with no sharp edges, ideally a circle. We recommend using the same colour PVC so it matches the area and still looks professional
    - Apply the PVC glue to the patch and the damaged area, making sure it doesn't spill on the rest of the inflatable
    - Leave the glue for a few minutes for it to it begins to set
    - Put the patch onto the inflatable and place a piece of paper or card on top of the patch with a towel on top to ensure no residue leaks, sticking to the towel. At this point add a heavy weight, applying an adequate amount of pressure and leave for an hour or two to fully bond.
    - Remove the weight, towel and card and check the glue has fully bonded with the PVC

2. Tear Aids – Premier Inflate can provide tear aids which are clear strips which can be placed over a small tear

    - Deflate the unit
    - Clean and dry the area making sure its free from dust, grease and any other substances
    - Make sure the repair area is kept flat
        - Get your clear tear aid and cut it to an adequate size so its larger than the tear or rip
        - Apply it to the tear or rip and add a heavy weight on top to allow it to grip well to the pvc
        - Remove the weight and check the tear aid is on there securely

3. Using thread to sew – You will need some thread which can be purchased through Premier Inflate as standard household thread will not be strong enough. You will also need a large needle from a standard pack, available in most supermarkets and pliers.
    - Deflate the Unit
    - Bring the two detached fabrics together
    - Weave the needle and thread around in a circular fashion over and under, carefully using the pliers to force the need through the material to secure the PVC together. It would be ideal to maintain the same distance between each thread insertion as the rest of the inflatable. Securely loop and tie off the end of the thread.

**PLEASE BE AWARE that all the above options are only temporary solution and we would always recommend getting your inflatable properly repaired as soon as possible and to always frequently check any temporary repairs to make sure it isn't getting any worse – if it is it requires immediate repair – Contact Premier Inflate on 01952 929393 to discuss repair quotes.**

# FAQ: Troubleshooting

Please see below some frequently asked questions which may be of some help to you in the future. Don't forget if you have any questions feel free to **email us** at info@premierinflate.co.uk or **call us** on 01952 929393.

## Q. Do I need to keep the blower / fan switched on all the time?

A. Yes, the inflatable needs a constant airflow to remain a usable solid unit.

## Q. Can Adults go on the inflatable?

A. All inflatables are different if you check your safety test and safety label on the step of your bouncy castle it will show you what height of users are suitable and how many users can use it at one time.

## Q. Can I cover the blower to reduce the sound?

A. No we wouldn't recommend covering the blower at any point.

## Q. My Inflatable doesn't seem to be fully inflating?

A. If it doesn't feel as though your bouncy castle or inflatable is fully inflating the first thing to check is that the inflation funnel is pulled straight with no bends or twists and is connected to the fan securely with the funnel buckle strap – this needs to be secured as tight as possible. The deflation funnel also needs to be secured as tight as possible whilst in use and this will make the air pressure for the inflatable sufficient.

## Q. My Inflatable is outside and it has started raining, the Inflatable bed is now bubbling?

A. Firstly if this occurs it is normal the air and water is creating the bubbling. Wipe the inflatable over with a dry towel ensuring to remove the excess water. Dry the unit off as much as possible and store overnight on a heightened platform such as a pallet so the remaining water can drain overnight. The next day when it is dry again inflate the unit and dry off thoroughly. If you have a heater attachment for a blower to dry it quicker this is also ideal to use to avoid damp inside the inflatable.

## Q. There is ink of my inflatable what can I do?

A. Try and ink/pen erasers which can be bought from a stationary shop.

## Q. How do I get out stubborn stains?

A. Sometimes stains aren't easy to get out but a lot of our customers are using Elbow Grease, HG Mould Remover, Pink Stuff and Magic Eraser Sponges and seeing great results.

## Q. Can I spray the Bouncy Castle with Water whilst the children are playing on it?

A. No we wouldn't recommend this as not only does it then cause the bouncy castle to be slippery causing a health and safety issue it could also add to the wear and tear of the inflatable.

## Q. I can hear a hissing noise is this ok?

A. Yes this is completely normal to hear this noise its because there is a constant airflow from the blower/fan.

## Q. If the child is taller than the inside walls of the inflatable can they still use it?

A. No, users need to be within the height restriction which is set by the height of the walls.

## Q. Do I need insurance?

A. If you are going to be hiring the inflatable out yes you need Public Liability Insurance which gets renewed every 12 months – you will need to update them anytime you purchase new items.

## Q. Do the Inflatables have to be PIPA Tested by Law?

A. No. All inflatables must be tested every 12 months but PIPA is just one of the testing organisations that can do this for you and bear in mind that not all inflatables fall under the PIPA Scheme.

# Gladiator Duel Instructions

Safety Rules:

1. The operator / supervisor of the inflatable must be a competent and responsible adult (over the age of 18) and must ensure that no one over the age over 11 is allowed to use the gladiator duel and preferably people of a similar size should duel.
2. The operator must regularly check, throughout use, that the podiums remain safe and secure at all times with the padding in-tact.
3. Ensure that the seams are monitored throughout use to check for any rips or tears.
4. All users should enter/exit the inflatable away from the blower funnel and any anchor points, to avoid tripping, and extra care should be taken when users are entering or exiting the inflatable.
5. All shoes should be removed before entering the inflatable; however, socks should be worn at all times.
6. No loose items are to be taken onto the inflatable that could cause or get damaged i.e. glasses, phones or jewellery.
7. No food or drink is to be consumed on the inflatable.
8. Once the two users have mounted the stands and have steadied themselves they have to await the whistle before duelling. The aim of the game is to use the padded jousting sticks to force the opponent of their stand, always avoiding their face.
9. The operator must ensure that the game remains safe at all times and should the game/users become violent the game must be stopped immediately.
10. It is recommended that the operator set a time limit to each duel and monitor the times. After each duel it is imperative that the operator check over the inflatable to make sure it has not become damaged.
11. Nobody is to be allowed near the blower or electrical sockets at any time and both are to be checked regularly throughout use.
12. All persons must remain a safe distance away from the inflatable whilst watching a duel.
13. The operator must ensure that any accidents are recorded in the accident record book accurately.
14. In the event of any damage to the inflatable all users must be removed from the inflatable until it has been restored to a safe condition. Likewise, should any damage come to the blower during operation it is to be switched off immediately and checked by an electrician before being used again.
15. Check the wind speeds and gusts using an anemometer

For any further questions or queries on the above please do not hesitate to contact Premier Inflate on 01952 92 93 93.

**Setting up the Gladiator:**

- It is important to firstly inspect the area you will be setting the inflatable up. The grass needs to be clean, clear from any debris and not on a slope, make sure there are no immediate hazards, such as low trees or hanging cables etc. If the inflatable is being set up on concrete it is imperative to ensure that it is anchored down with heavy weights.
- Using a relevant sack truck move the inflatable to the centre of the area and begin to unfold it.
- Attach the long funnel to the electric blower.
- Place the feet of the stands securely into the holes of the inflatable in readiness for the podiums to be fitted.
- Once the feet are in place connect the podiums into place safely and securely making sure that the Velcro is in place for complete coverage of the padding.
- Connect the blower using the correct extension cable, taking extra care to ensure that the cable is tapped down as much as possible to avoid it being a tripping hazard.
- Switch the power on and be sure to use a power breaker.
- Using the anchor points peg the inflatable into place with steel pegs. Remember to continuously check these anchor points throughout use to ensure that they are still secured.
- Check over the head guards and jousting sticks to ensure that they are in-tact, in good condition and are in no way going to in danger a user i.e. has any sharp edges.
- Place safety mats around the inflatable to create a safe landing area.
- Using your daily use checklist and maintenance log undertake and detail the relevant checks such as air pressure checks. These records are to be retained by the owner.
- Before deflating the unit the operator is to ensure that all the users have safely been removed and are a safe distance away.
- Once the unit has been deflated it can be packed away safely.

**Please note that as the owner of the inflatable it is your responsibility to ensure that they have undertaken annual safety checks and inspections which should be carried out by the inflatable manufacturer or RPII inspector. This also means that any electrical equipment such as the blower is to be inspected by an electrician after two years have elapsed since its purchase.**

# Bungee Run / Hungry Hippo Instructions

Please familiarise yourself with this instruction manual and its contents before attempting to use or set up the bungee run inflatable. It is necessary to understand this instruction manual to ensure that you are capable of providing a reliable service. Please also refer to the HSE Entertainment Information Sheet available at www.hse.gov.uk to find information to run in con- junction with this guide.

It is the responsibility of the owner of the inflatable to ensure that any persons who may be set- ting up the inflatable is fully aware of the contents of this guide and is capable of dealing with said tasks. Premier Inflate do not accept liability whatsoever for any injuries, damages or other claims in result of the use of the product and our liability is solely limited to manufacturing purposes. This unit is extremely heavy and we do not recommend that one person carries the unit under any
circumstances. Setting up:

1. It is recommended that you have a separate groundsheet and this is to be placed and se- cured on the surface of the area where you wish for your inflatable to be erected.
2. Using two people roll the inflatable out over the groundsheet, ensuring that the blower pipe is at the rear.
3. Pull out the inflatable by pulling on the nylon webbing anchor points.
4. Once you have manoeuvred the inflatable into its desired position use the steel anchor stakes to secure the inflatable to the ground. Remember to ensure that the stakes and pushed firmly into the ground, but also making sure that the anchor loops still have a bit of leeway. The anchor points need to be checked regularly throughout use to ensure that they are still safe and secure.
5. Pull the blower chute out straight and flat then place the blower immediately behind the funnel. Stretch the chute over the blower funnel as far as it will go and secure it into place using a buckle strap.
6. Please ensure that the fan is placed on a level surface where there is nothing obstructing it. Remove any litter of debris from the area and ensure that this is checked regularly throughout use.
7. Using a suitable extension cable connect the fan to a 230V domestic electricity supply using a plug in RCD safety device. This device is essential to safeguard against electric shocks.
8. After checking that no users are on or near the inflatable turn the power on for the inflatable.
9. The fan should be left running at all times throughout use as this is a continuous pressure device where air is forced into the inflatable by the fan and then slowly escapes through the many needle holes produced during manufacture producing its 'bounciness'.

Bungee Cord Assemblies:

10. This inflatable is also supplied with four bungee assemblies. Each assembly has one end with a red webbing loop and on the other end a similar loop fitted with a metal snap hook. You will also be supplied with two metal mounting frames with a central fixing eye.

Prior to installing the frames into the pockets on the rear external wall of the inflatable, two bungee assemblies must be secured to each frame. This process involves threading the red webbing loop through the eyehole, and then followed by the complete bungee assembly through the webbing loop and pulling tight. This method ensures that no knot that is present will fail.

Never secure the bungee rope to the frame of any other product. Never use a hook, karabiner or other object as this may fail under tension and strike the user of the equipment or any persons nearby and this may cause serious injury. Never tie a knot in the bungee rope or red webbing loop as this may cause the equipment to fail.

11. Pass the assemblies through the hole in the back wall now that the frames have been in- stalled in the pockets with the eyebolts facing the direction of the pull.
12. All bungee run units will be provided with two harnesses
13. Fit the harness to the user around their waist, with the buckle to the front and the D ring to the rear. Ensure the harness is secure and tight.
14. Secure the bungee cord to the rear of the harness by attached the snap hook to the D ring.
15. For users who weigh up to 60kg only attach one bungee rope to the waist harness, anyone above this weight to a maximum of 120kg should have two bungee ropes attached to their harness.
16. All bungee assembles, harnesses, snap hooks and frames must be examined between each use for signs of wear and tear that may put any users at risk.

**General rules:**

1. The inflatable is designed for one user at a time, either adult or child, weighing no more than 120kgs.
2. Please note that bungee runs users should be no shorter than 1.2m
3. For users with a weight of up to 60kgs one bungee cord should be used. For users from 61kg to 120kgs two bungee cords should be used.
4. Do not stretch the bungee cords beyond the maximum usable length which is twice the unstretched length
5. Do not tie knots in the bungee cords
6. Two stage fail safe locking systems should be in place, if necessary.
7. Do not use frayed or worn bungee cords and they must be replaced after a maximum period of 2 years from first use
8. No food or drink to be consumed on or near the inflatable, at any time.
9. All shoes, gasses, jewellery and other loose items must be removed before using the inflatable.
10. No face paints, party poppers, coloured streamers or silly string is to be used on or near the inflatable.
11. No smoking or open flames i.e. barbeques near the inflatable.
12. No foul play or misuse at any times, this includes climbing, hanging or sitting on walls.
7. A responsible and competent adult, over 18 years old, must operate/supervise the inflatable at all times.

8. Limit numbers accordingly to age and size of users and avoid overcrowding.
9. Ensure that no one is pushing, fighting or behaving inappropriately near the inflatable that could cause injury or distress to others.
10. No pets, toys or instruments are allowed on or near the inflatable.
11. Switch the fan off at the mains should the inflatable not be in use for long periods of time.
12. Do not allow anyone to bounce on the front step as this is dangerous. The front step is for the use of entering or exiting the inflatable safely.
13. Anyone who has back/neck problems, heart problems, feeling unwell or is suffering from the effects of alcohol or drugs should not use the inflatable.
14. No one is to be on or near the inflatable during inflation or deflation.
15. Ensure that there is a minimum of 2 metres around the inflatable that is clear.
16. The inflatable should not be used in the event of the jumping area becoming wet due to rain and no shower covers being fitted. In these circumstances the inflatable should not be used.
17. In the event of heavy rain the inflatable should be switched off, dried down and kept somewhere safe and dry.
18. In the event that the fan stops working it is imperative to ensure that all users are safely removed from the inflatable immediately. In the event that the fan overheats or losses power, try switching it off at the mains then switch it back on again 5 minutes later. Hopefully this should help it restart – if not contact an electrician.
19. Never use this unit without first making sure that there is proper anchorage in place as it could blow away in the wind, topple over or detach from the fan.
20. If using the inflatable indoors make sure that the height is sufficient enough.
21. If using indoors or on hard surface it is necessary to anchor it into place using substantial sandbags or other heavy-duty weights to stop movement.
22. Do not modify or alter the unit in anyway.
23. Do not have the unit repaired by anyone else other than the manufacturer.
24. This inflatable should be cleaned as per our instructions in our business guide.
25. Deflate and pack the unit as per our instructions in our business guide.

# Inflatable Mega Slide Instructions

Safety Rules:
1. The operator / supervisor of the inflatable must be a competent and responsible adult (over the age of 18) and must ensure that no one over the height detailed on the inflatable is allowed to enter the slide.
2. The operator must regularly check, throughout use, that the guide ropes are still secure, pegs are still secured into the ground properly and the slip and climb sheet is still securely fitted to the inflatable.
3.Ensure that the seams are monitored throughout use to check for any rips or tears.
4. All shoes should be removed before entering the inflatable; however, socks should be worn at all times.
5. No loose items are to be taken onto the inflatable that could cause or get damaged i.e. glasses, phones or jewellery.
6. No food or drink is to be consumed on the inflatable.
7. The allowed amount of users must be spread across the inflatable for example if 6 users are allowed at one time then 2 users are going up the steps, two users are on the platform and 2 users are coming down the slide and all 6 users SHOULD NOT be all on the platform together.
8. No foul play from the users at any time on the inflatable.
9. Nobody is to be allowed near the blower or electrical sockets at any time and both are to be checked regularly throughout use.
10. All persons must remain a safe distance away from the inflatable whilst waiting to go onto the slide.
11. The operator must ensure that any accidents are recorded in the accident record book accurately.
12. In the event of any damage to the inflatable all users must be removed from the inflatable until it has been restored to a safe condition. Likewise, should any damage come to the blower during operation it is to be switched off immediately and checked by an electrician before being used again.
13. Check the wind speeds and gusts using an anemometer

For any further questions or queries on the above please do not hesitate to contact Premier Inflate on 01952 92 93 93.

**Setting up the Slide:**

- It is important to firstly inspect the area you will be setting the inflatable up. The grass needs to be clean, clear from any debris and not on a slope, make sure there are no immediate hazards, such as low trees or hanging cables etc. If the inflatable is being set up on concrete it is imperative to ensure that it is anchored down with heavy weights.
- Using a relevant sack truck move the inflatable to the centre of the area and begin to unfold it.
- Attach the long funnel to the electric blower.

- Using pegs secure the inflatable into the ground making sure all anchor points on the inflatable are used to secure it down. Remember to continuously check these anchor points throughout use to ensure they are still secured.
- Connect the blower using the correct extension cable, taking extra care to ensure that the cable is tapped down as much as possible to avoid it being a tripping hazard.
- Switch the power on and be sure to use a power breaker.
- Attach the slip and climb sheet to the inflatable.
- Make sure safety mats cover the full impact area around the step at 1.2m.
- Guide ropes to be secured to the anchors at the top of the slide and thickness of the rope must be between 18mm and 45mm and secured appropriately to the ground to ensure stability.
- Using your daily use checklist and maintenance log undertake and detail the relevant checks such as air pressure checks and wind speeds. These records are to be retained by the owner.
- Before deflating the unit the operator is to ensure that all the users have safely been removed and are a safe distance away.
- Once the unit has been deflated it can be packed away safely.

**Please note that as the owner of the inflatable it is your responsibility to ensure that they have undertaken annual safety checks and inspections which should be carried out by the inflatable manufacturer, PIPA or an RPII inspector. This also means that any electrical equipment such as the blower is to be inspected by an electrician after two years have elapsed since its purchase.**

# Inflatable Bouncy Obstacle Course Instructions

Safety Rules:

1.The operator / supervisor of the inflatable must be a competent and responsible adult (over the age of 18) and must ensure that no one over the height restriction detailed on the inflatable

2. The operator must regularly check, throughout use, the safety mats at all fall off points including where the connecting sections meet are still in place covering the impact area. The slip and climb sheet is still secured to the inflatable correctly.
3. Ensure that the seams are monitored throughout use to check for any rips or tears.
4. All users should enter at one end and exit at the other and the operator / supervise must ensure that the users are flowing through the inflatable.
5. All shoes should be removed before entering the inflatable; however, socks should be worn at all times.
6. No loose items are to be taken onto the inflatable that could cause or get damaged i.e. glasses, phones or jewellery.
7. No food or drink is to be consumed on the inflatable.
8. The Operator / Supervisor is to ensure that the allowed number of users for the inflatable are spread evenly throughout across the inflatable.
9. The operator is to ensure there is no foul play inside the inflatable obstacle course.
10. Nobody is to be allowed near the blower or electrical sockets at any time and both are to be checked regularly throughout use.
11. All persons must remain a safe distance away from the inflatable whilst watching.
12. The operator must ensure that any accidents are recorded in the accident record book accurately.
13. In the event of any damage to the inflatable all users must be removed from the inflatable until it has been restored to a safe condition. Likewise, should any damage come to the blower during operation it is to be switched off immediately and checked by an electrician before being used again.
14. Check the wind speeds and gusts using an anemometer

For any further questions or queries on the above please do not hesitate to contact Premier Inflate on 01952 92 93 93.

**Setting up the Bouncy Obstacle Course:**

- It is important to firstly inspect the area you will be setting the inflatable up. The grass needs to be clean, clear from any debris and not on a slope, make sure there are no immediate hazards, such as low trees or hanging cables etc. If the inflatable is being set up on concrete it is imperative to ensure that it is anchored down with heavy weights.
- Using a relevant sack truck move the inflatable to the centre of the area and begin to unfold it.

- Attach the long funnel to the electric blower.
- Using pegs secure the inflatable into the ground making sure all anchor points on the inflatable are used to secure it down. Remember to continuously check these anchor points throughout use to ensure they are still secured.
- Connect the blower using the correct extension cable, taking extra care to ensure that the cable is tapped down as much as possible to avoid it being a tripping hazard.
- Switch the power on and be sure to use a power breaker.
- Attach the slip and climb sheet to the inflatable.
- Make sure safety mats cover the full impact area around the step at 1.2m. This includes the fall off points where the sections connect together. The fall off points need to be supervised throughout use.
- Using your daily use checklist and maintenance log undertake and detail the relevant checks such as air pressure checks. These records are to be retained by the owner.
- Before deflating the unit the operator is to ensure that all the users have safely been removed and are a safe distance away.
- Once the unit has been deflated it can be packed away safely.

**Please note that as the owner of the inflatable it is your responsibility to ensure that they have undertaken annual safety checks and inspections which should be carried out by the inflatable manufacturer or RPII inspector. This also means that any electrical equipment such as the blower is to be inspected by an electrician after two years have elapsed since its purchase.**

# Inflatable Climbing Wall Instructions

Safety Rules:

1. The operator / supervisor of the inflatable must be a competent and responsible adult (over the age of 18) this supervisor must ensure that a one to one supervision is provided and all safety equipment such as guide ropes safety harnesses are used and put on the user correctly. At no point should a using be climbing up or down without the support and supervision of the operator using the relevant safety equipment.
2. The correct safety equipment must be purchased to use this inflatable correctly such as harnesses, guide ropes and pulling systems are purchased. Its best to use ones provided for rock climbing etc – it is important that the correct safety equipment is purchased and used.
3. Ensure that the seams are monitored throughout use to check for any rips or tears.
4. All users should enter/exit the inflatable away from the blower funnel and any anchor points, to avoid tripping, and extra care should be taken when users are entering or exiting the inflatable.
5. All shoes should be removed before entering the inflatable; however, socks should be worn at all times.
6. No loose items are to be taken onto the inflatable that could cause or get damaged i.e. glasses, phones or jewellery.
7. No food or drink is to be consumed on the inflatable.
8. The operator / supervisor must ensure that only one user is climbing the wall at any one time with the operator providing constant support through the guide rope system
9. The operator must ensure that the game remains safe at all times and users should not be climbing over the walls to enter or exit the inflatable
10. Nobody is to be allowed near the blower or electrical sockets at any time and both are to be checked regularly throughout use.
11. All persons must remain a safe distance away from the inflatable whilst watching the climb.
12. The operator must ensure that any accidents are recorded in the accident record book accurately.
13. In the event of any damage to the inflatable all users must be removed from the inflatable until it has been restored to a safe condition. Likewise, should any damage come to the blower during operation it is to be switched off immediately and checked by an electrician before being used again.
14. Check the wind speeds and gusts using an anemometer

For any further questions or queries on the above please do not hesitate to contact Premier Inflate on 01952 92 93 93.

**Setting up the climbing wall:**

- It is important to firstly inspect the area you will be setting the inflatable up. The grass needs to be clean, clear from any debris and not on a slope, make sure there are no immediate hazards, such as low trees or hanging cables etc. If the inflatable is being set up on concrete it is imperative to ensure that it is anchored down with heavy weights.

- Using a relevant sack truck move the inflatable to the centre of the area and begin to unfold it.
- Attach the long funnel to the electric blower.
- Using pegs secure the inflatable into the ground making sure all anchor points on the inflatable are used to secure it down. Remember to continuously check these anchor points throughout use to ensure they are still secured.
- Connect the blower using the correct extension cable, taking extra care to ensure that the cable is tapped down as much as possible to avoid it being a tripping hazard.
- Switch the power on and be sure to use a power breaker.
- Make sure safety mats cover the full impact area around the step at 1.2m.
- Guide ropes to be secured to the anchors at the top of the slide and thickness of the rope must be between 18mm and 45mm and secured appropriately to the ground to ensure stability.
- All correct safety equipment is installed and ready to use.
- Using your daily use checklist and maintenance log undertake and detail the relevant checks such as air pressure checks. These records are to be retained by the owner.
- Before deflating the unit the operator is to ensure that all the users have safely been removed and are a safe distance away.
- Once the unit has been deflated it can be packed away safely.

**Please note that as the owner of the inflatable it is your responsibility to ensure that they have undertaken annual safety checks and inspections which should be carried out by the inflatable manufacturer or RPII inspector. This also means that any electrical equipment such as the blower is to be inspected by an electrician after two years have elapsed since its purchase.**

**Please remember that all inflatables follow the same basis of all of the above instructions however if you have any doubts about your inflatable set up, safety procedures or instructions for use you can contact Premier Inflate at any time on 01952 929393 or info@premierinflate.co.uk and we will happily clarify any points for you.**

# Premier Inflate

Premier Inflate Limited
Unit 11
Halesfield 18
Telford
TF7 4PP
01952 929393
enquiries@premierinflate.co.uk